BITUMEN SOFTBOARDS

Technical Data Sheet

Desription:
Hunton Bitumen Softboard consists of compressed wood fibres from Scandinavian timber, impregnated with Bitumen Emulsion. Hunton Bitumen Softboard complies in general with the requirements of the American and British Standard Codes of Practise as listed below.

Uses:
Hunton Botumen Softboards is used as a general purpose expansion joint filler in concrete slab and wall construction, and as a protection board for waterproofing membranes.

Sizes:

Thickness	10 mm, 12 mm, 19 mm, 25 mm
Sheet Size	2.20 m x 1.22 m
Cut Strips	100 mm, 150 mm, 175 mm, 200 mm other widths to order.

Technical Data:

Complies with ASTM D1751 – Compression & Recovery Test
BS 1142: 1989 (SBI Grade)
D.o.T. Specification for Highway Works Part 3: Clause 1015: 1991 (application EJF)
Weathering Test Method 800/V.C 1.3

Typical Test Results (BS 1142):

Speciment No.	**1**	**2**	**Specification**
Load required to compress specimen to 50% of pre-test thickness	As supplied 1.68 N/mm²	Weathered 1.21 N/mm²	0.7–10.0 N/mm²

Compression & Recovery Test (Test Method 800/V.C1.4)
The specimens testet complied with the Weathering and Compression and Recovery Requirements.
Test Results on 12 mm Thickness – Independently Tested by Namas approved testing laboratory "Stangers in UK".
Recovery after 3rd Cycle of Compression 80/82%.

Typical Test Results 12 mm (BS1142):1989

BS 1142	STAND.	HUNTON
Thickness setting	No requirement	4,5%
Recovery	min. 70 %	83%
Water Absorption	max. 45 %	25%
Density	max. 400 kg/m³	222 kg/m³
Asphalt Content	No requirement	21-27%

Specification: Hunton Bitumen Softboard to be used in all Expansion Joints and as a Protection Board to Membranes.

BITUMEN SOFTBOARDS

Hunton EJF and Hunton Protection Boards are manufactured to the highest specifications, in quality controlled manufacturing facilities in Scandinavia. They can be used to meet even the most demanding of specifications and will fully protect the waterproofing membrane from the most aggressive of backfill materials.

As a protection board for membranes they play an integral part to the overall waterproofing specification, ensuring full protection and thereby maintaining the integrity of the waterproofing system.

Hunton Bitumen Softboards can be used in all Expansion Joints including roofs. Hunton Bitumen Softboards have been used in hundreds of prestigious projects worldwide.

These High Performance Boards are supplied by technically capable distributors to the construction industry, throughout the world.

Major projects recently supplied include:

References

- Chek Lap Kok International Airport Hong Kong
- International Airport – Extension Bahrain
- AL–AWEIR Power Station Dubai
- Dubai International Airport Extension Terminal 2 U.A.E.
- Transportation Roads Improvement Program (TRIP) Abu Dhabi
- M25 London Orbital Motorway

A more detailed list can be provided by your local distributor.
Should you require additional information, technicak advice, or installation details please contact your local Distributor.

Local Distributor:

Producer:
Hunton Fiber AS,
P.O. Box 19,N-1300 Sandvika, Norway
Telephone: +47 67 80 54 00, Fax: +47 67 80 54 01
e-mail: hunton@hunton.com www.hunton.no

BITUMEN SOFTBOARDS

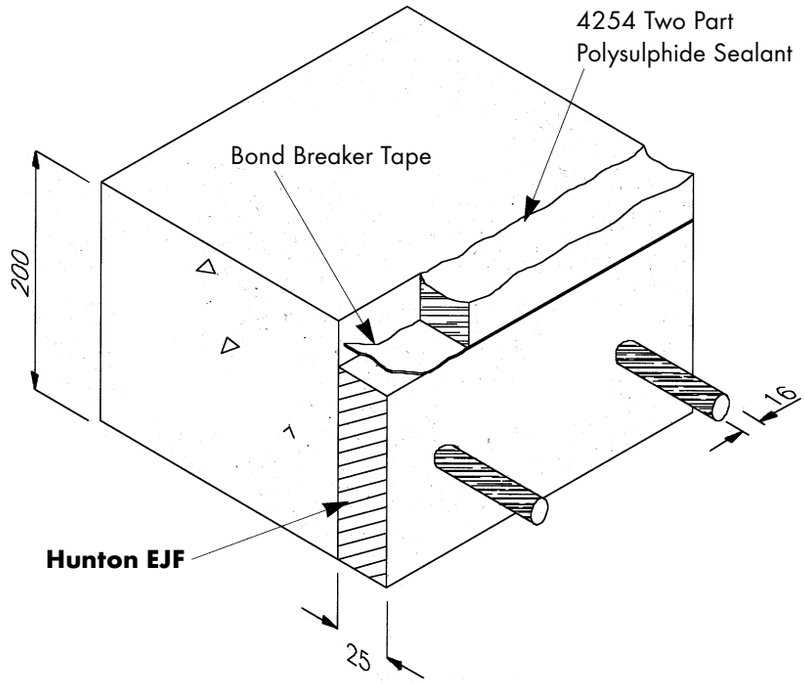

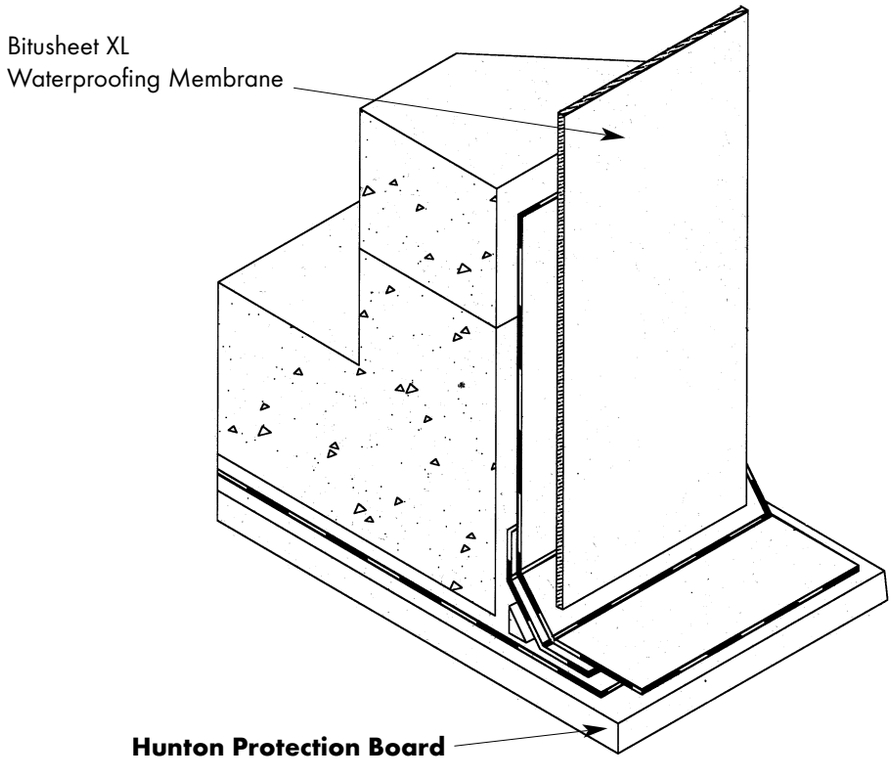

- For Expansion Joints in Concrete and Protection To Waterproofing Membranes

BITUMEN SOFTBOARDS

Typical Applications

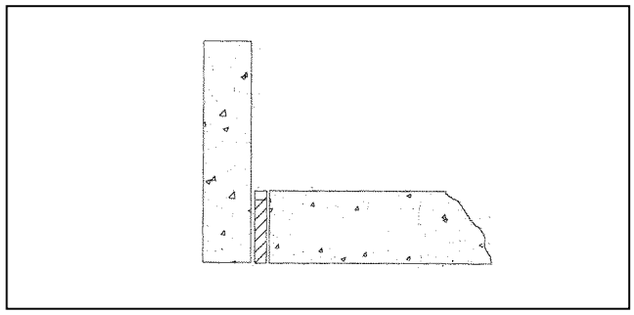

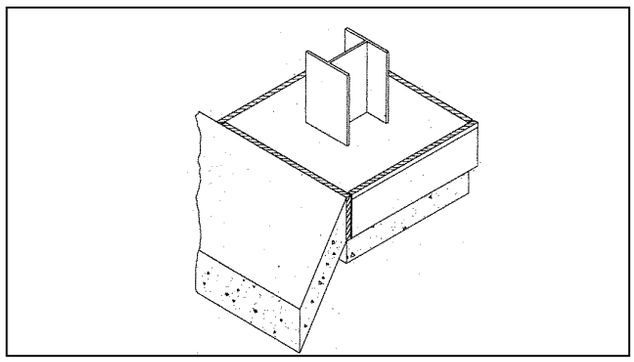

Isolation Joints between concrete slabs, walls and around column bases

Installed between brick or block wall and concrete slab to absorb thermal movement.

- Warehouses
- Factories
- Retail parks
- Offices
- Shopping complex
- Multiplex cinemas
- Airport terminal buildings
- Distribution centres
- Processing plants
- Workshops

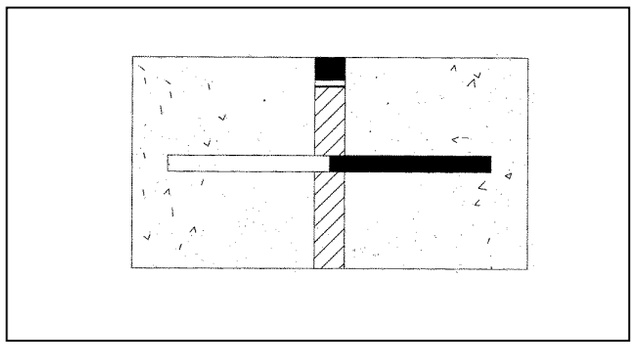

Expansion Joint concrete slabs

Installed in Expansion Joints in external and internal concrete slabs.

- Warehouses
- Factories
- Retail parks
- Hardstandings
- Airport Aprons & Taxiways
- Roads

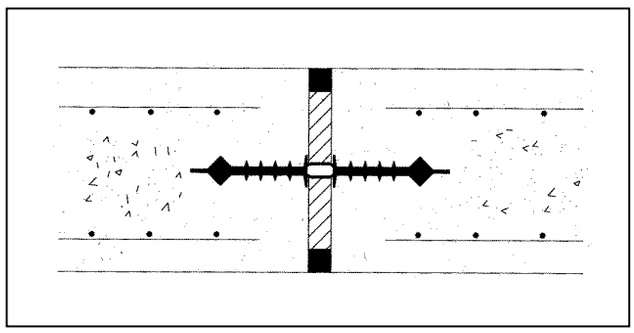

Expansion Joints in Vertical Walls

- Internal walls
- Boundary walls
- Sea defence walls
- Between new and existing building

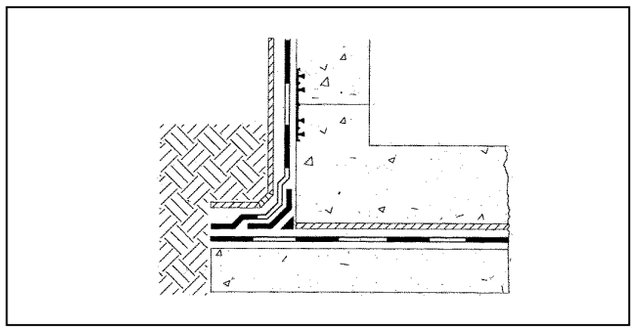

Protection to Waterproofing Membranes. Providing protection to below ground membranes

- Basements
- Retaining walls
- Lift pits

BITUMEN SOFTBOARDS

For use as protection to waterproofing membranes

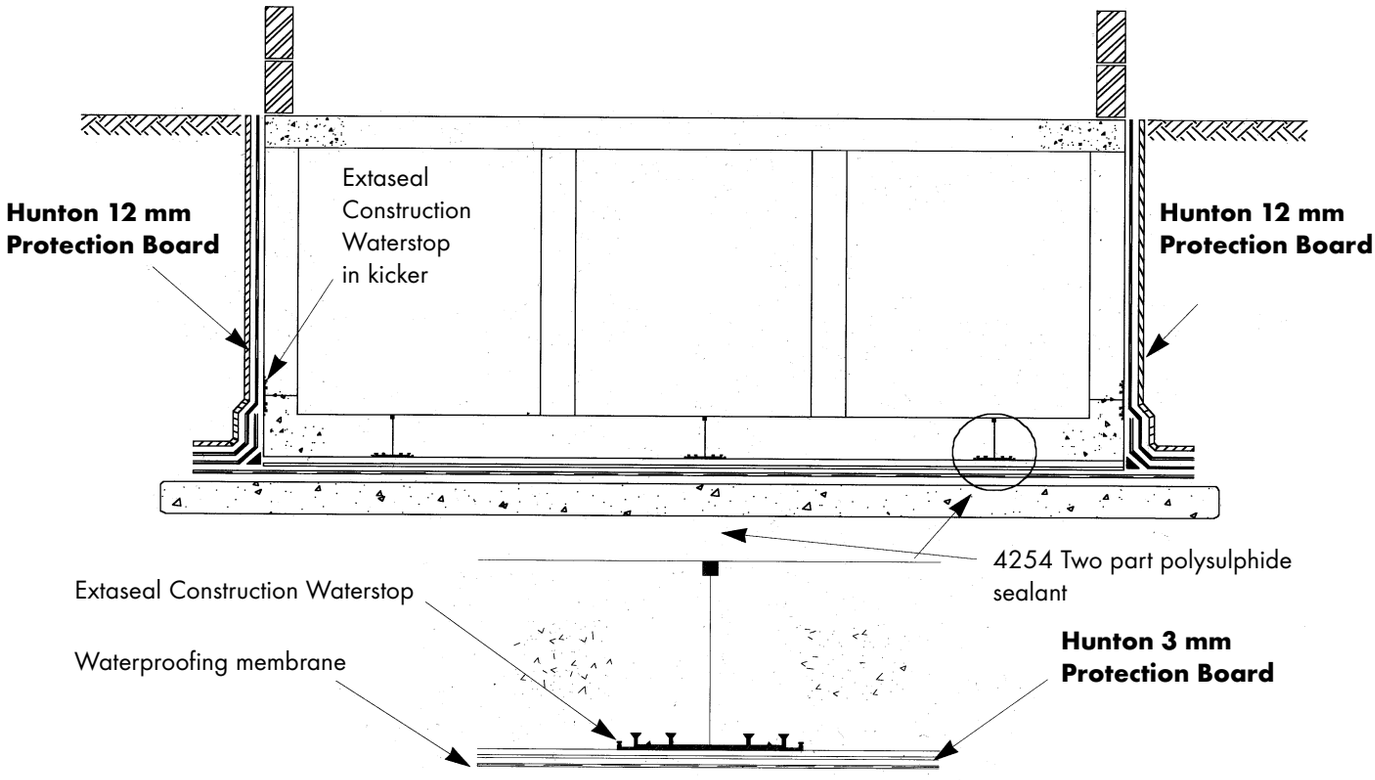

Below Ground Waterproofing

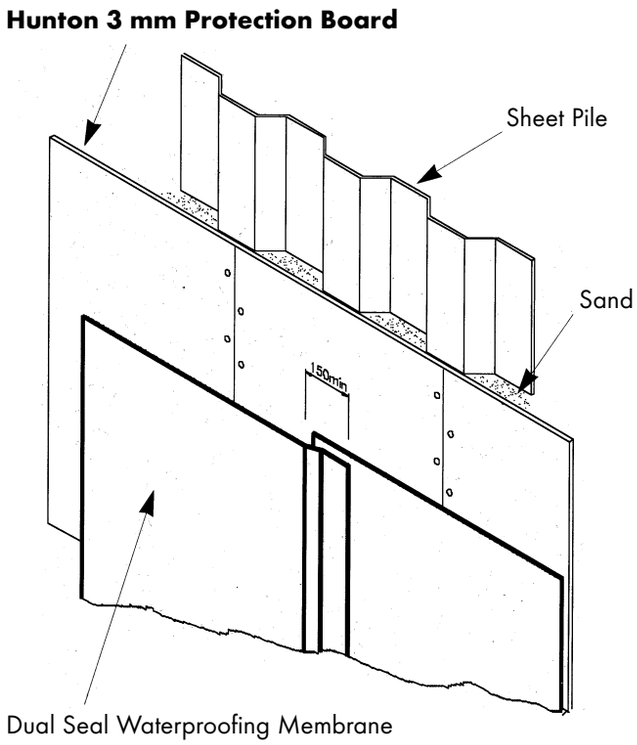

Permanent Shuttering

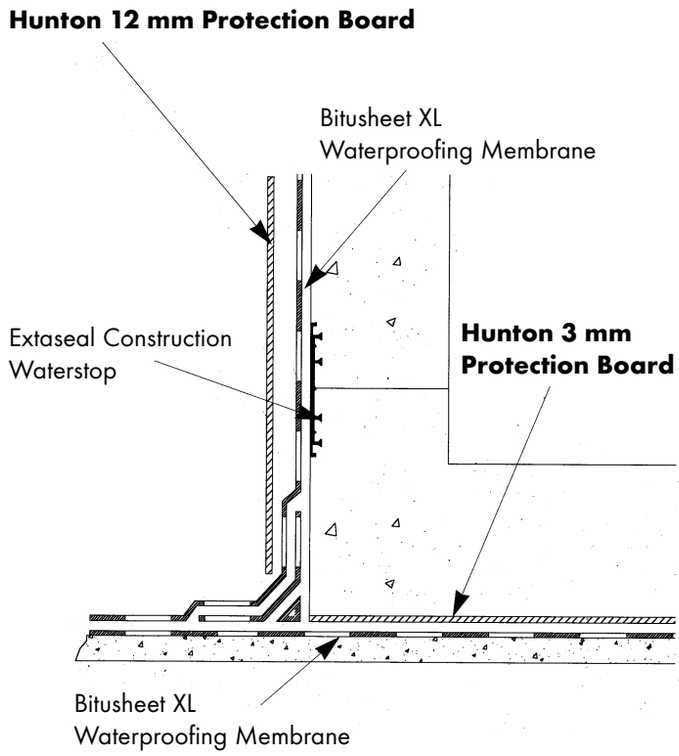

Wall / Floor Junction

BITUMEN SOFTBOARDS

Technical Data Sheet

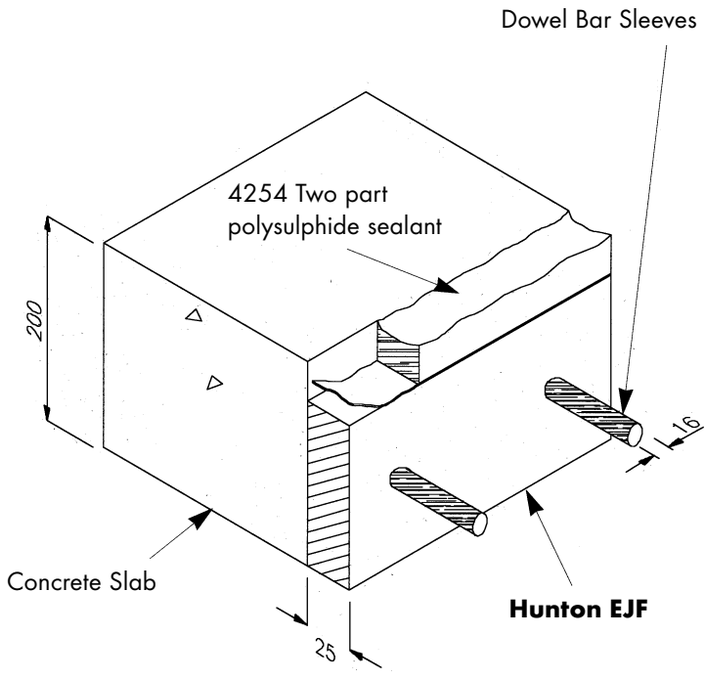

Expansion Joint in Concrete Slab

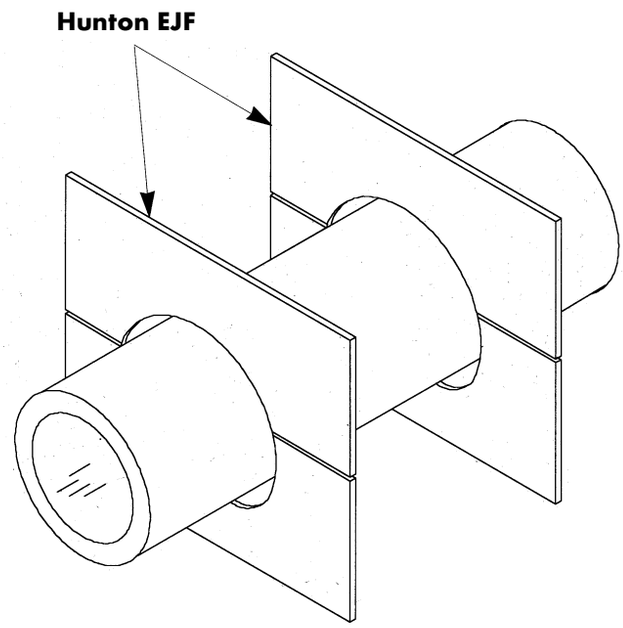

Pipe Application Detail

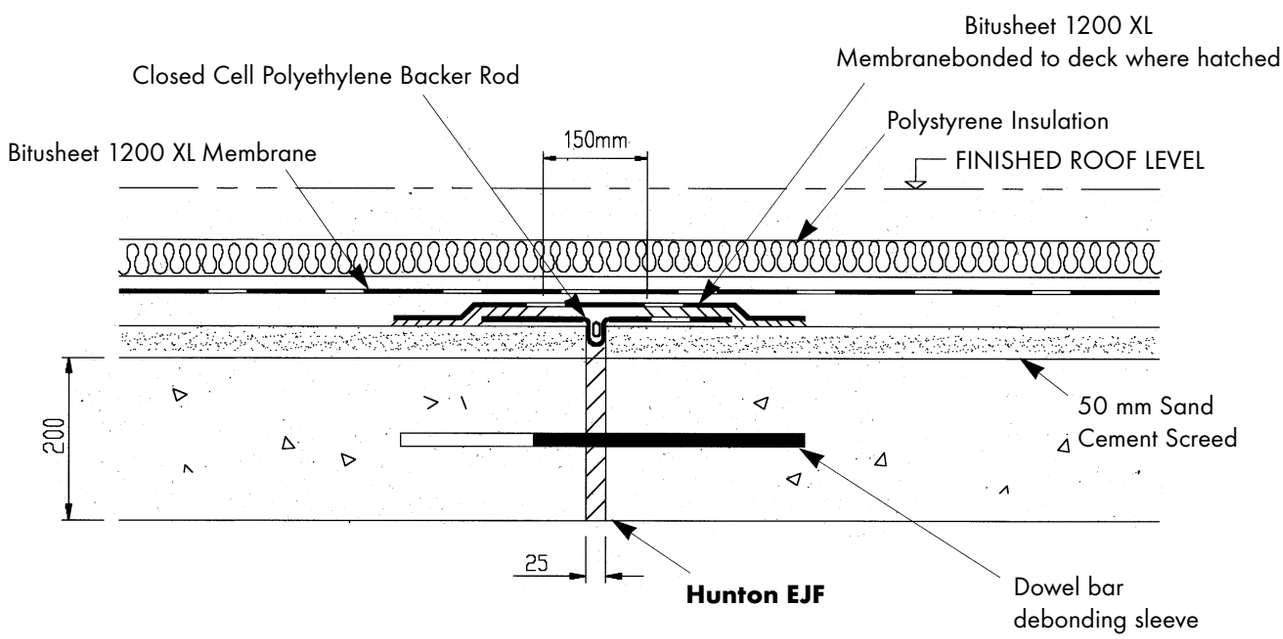

Expansion Joint in Concrete Roof